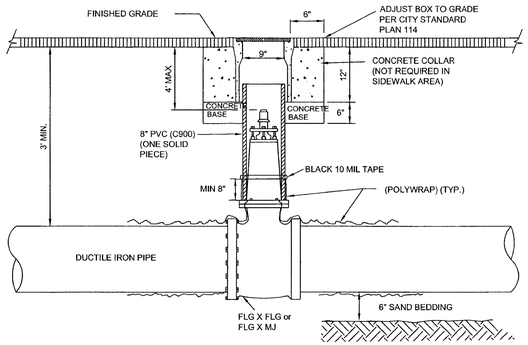

NOTES :

1. VALVES SHALL BE ONE OF THE FOLLOWING :
   A) BUTTERFLY VALVES : 12" AND LARGER AS SHOWN ON APPROVED MATERIALS LIST SHALL BE USED. APPROVED LIST INCLUDE: ("GROUNDHOG"), ("AMERICAN"), MUELLER, B.I.F., KENNEDY, DRESSER.
   B) GATE VALVES: 10" AND SMALLER AS SHOWN ON LIST OF APPROVED MATERIALS. APPROVED LIST INCLUDES: MUELLER RESILIENT SEAT, CLOW R/W, KENNDEY, AMERICAN-80 "CRS".
2. OPERATING NUTS SHALL BE RAISED TO WITHIN 4' OF FINISHED STREET GRADE WITH REQUIRED EXTENSIONS BEING PROVIDED BY VALVE MANUFACTURER.
3. POLYWRAP ALL PIPES AND VALVES.
4. VALVES SHALL BE TESTED BY MANUFACTURER AS FOLLOWS: 6" - 12", 175 PSI; 14" AND LARGER, 150 PSI. IN ADDITION, HYDROSTATIC TESTS AGAINST FULLY CLOSED VALVE VANES SHALL BE DONE AS FOLLOWS: 6" - 12", 350 PSI; 14" AND LARGER, 300 PSI.
5. VALVE BOX: BROOKS 3-RT OR CHRISTY G5 WITH G5C LID.

CITY OF TRACY

TRACY Think Inside the Triangle™	REVIEWED BY: Khanna CITY ENGINEER RCE 37186		STANDARD PLAN No. 402
	Res No. 2008-255	DATE:	VALVE, BOX & RISER
	Rev:	Rev:	
	Rev:	Rev:	

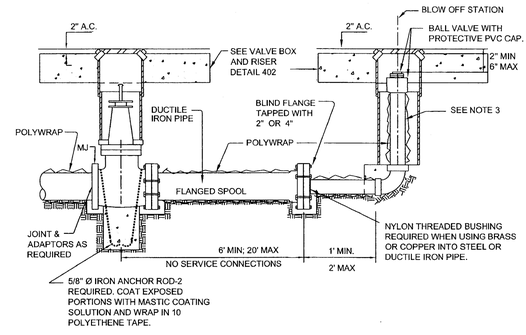

NOTES:

1. FOR THRUST BLOCK DIMENSIONS, SEE STANDARD PLAN NO. 423
2. THE FUTURE EXTENSION STUB SHALL BE TESTED AND CHLORINATED WITH THE REST OF THE MAIN AND BLOWN OFF THROUGH THE PIPE.
3. BLOW OFF SHALL BE 2" BRASS PIPE OR TYPE "K" COPPER TUBING PIPE (6" & 8" MAIN) OR 4" DUCTILE IRON PIPE (10" & 12" MAIN).
4. USE BALL VALVE ON 2" SVC OR BLOW OFF ONLY
5. TRAFFIC BOX SHALL BE CHRISTY G5 WITH G5C LID OR APPROVED EQUAL.
6. VALVE AND BLOW OFF BOXES SHALL BE INSTALLED IN PAVED AREA ONLY UNLESS APPROVED BY THE CITY ENGINEER.

CITY OF TRACY

TRACY Think Inside the Triangle™	REVIEWED BY: Khanna CITY ENGINEER RCE 37186		STANDARD PLAN No. 409
	Res No. 2008-255	DATE:	BLOW OFF FOR FUTURE EXTENSION WITH VALVE
	Rev:	Rev:	
	Rev:	Rev:	

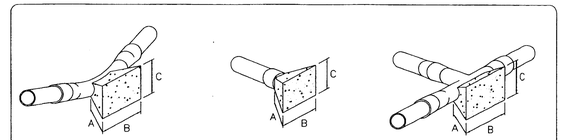

BENDS DEAD ENDS TEES

THRUST BLOCK AREA REQUIRED											
ALLOWABLE SOIL BEARING VALUE - 2500 POUNDS PER SQUARE FOOT											
FITTINGS	6" LINE			8" LINE			10" LINE			12" LINE		
	A	B	C	A	B	C	A	B	C	A	B	C
22 1/2" BEND	1'	1'-6"	1'-6"	1'	2'	2'	1'	3'	2'	1'-6"	3'	3'
45" BEND	1'	2'	2'	1'-6"	3'	2'-6"	1'-6"	3'-6"	3'	2'	4'	4'
90" BEND	1'-6"	3'	3'	1'-6"	4'	3'	2'	5'	4'	2'	7'	4'
DEAD END	1'	2'-6"	2'	1'-6"	3'	3'	2'	4'	3'-6"	2'	5'	4'
TEE	1'	2'-6"	2'	1'-6"	3'	3'	2'	4'	3'-6"	2'	5'	4'

NOTES:

1. CONCRETE SHALL BE CLASS B, 2500 PSI MINIMUM AT 28 DAYS.
2. THRUST BLOCKS SHALL BE PLACED AGAINST UNDISTURBED SOIL.
3. MINIMUM BEARING AREAS ARE SHOWN IN THE ABOVE TABLE.
4. THRUST BLOCKS WILL BE WEDGE-SHAPED AND SHALL NOT OVERLAP BELL ON FITTINGS OR INTERFERE WITH BOLTS ON FLANGE.

CITY OF TRACY

TRACY Think Inside the Triangle™	REVIEWED BY: Khanna CITY ENGINEER RCE 37186		STANDARD PLAN No. 423
	Res No. 2008-255	DATE:	THRUST BLOCK
	Rev:	Rev:	
	Rev:	Rev:	

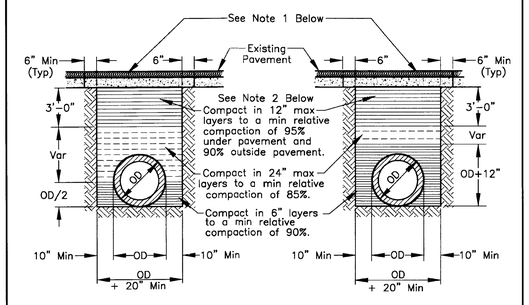

RIGID CONDUIT FLEXIBLE CONDUIT

NOTES:

1. New pavement shall be 1" thicker than existing pavement, minimum of 0.25 Ft. New base shall be 1" thicker than existing base, min of 0.50 Ft.
2. Select native material or imported granular material as approved by the Director of Public Works. Backfill with materials equal to or better than the existing pavement and base in quality.
3. Relative compaction of materials shall be tested in accordance with the State of California, Dept. of Transportation Testing Manuals, test method No. California 216 or 231.
4. All existing pavement shall be neatly cut to line prior to trench excavation.
5. Jetting or ponding will be permitted within the street right-of-way with a 3 year bond, when approved by the Director of Public Works.
6. When shown by soil composition and compactability, ninety percent (90%) compaction may be used, when approved by the Director of Public Works.
7. Special bedding and backfill requirements may be shown on the plans or specified in the special provisions.

Public Works San Joaquin County Working for YOU	TYPICAL TRENCH BACKFILL	Approved by: Thomas M. Gau	
	COUNTY OF SAN JOAQUIN DEPARTMENT OF PUBLIC WORKS	No. / Revision Description / Date	
	Date: DEC 2014	Std. Dwg. No.	R-29

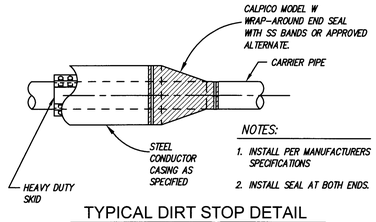

NOTES:

1. INSTALL PER MANUFACTURERS SPECIFICATIONS
2. INSTALL SEAL AT BOTH ENDS.

TYPICAL DIRT STOP DETAIL

NOT TO SCALE

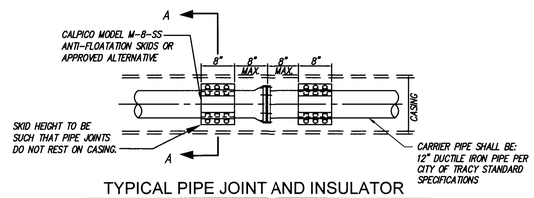

TYPICAL PIPE JOINT AND INSULATOR

NOT TO SCALE

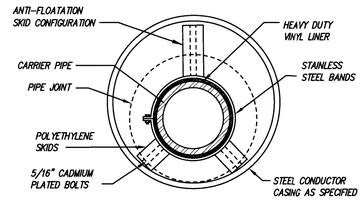

WELDED STEEL CASING REQUIREMENTS

PIPE SIZE	12"
MINIMUM CASING SIZE	18"
MINIMUM WALL THICKNESS	0.375"
MINIMUM YIELD STRENGTH	35,000 PSI

SECTION "A-A"

NOT TO SCALE

UTILITY ENCASEMENT DETAIL

NOT TO SCALE

1

CITY OF TRACY

APPROVAL OF THESE PLANS DOES NOT RELEASE THE DEVELOPER OF THE RESPONSIBILITY FOR CORRECTION OF MISTAKES, ERRORS, OR OMISSIONS CONTAINED THEREIN, IF DURING THE COURSE OF CONSTRUCTION OF THE IMPROVEMENTS PUBLIC INTEREST REQUIRES MODIFICATIONS OF OR A DEPARTURE FROM THE SPECIFICATIONS AND DETAILS OF THE CITY OF TRACY, THE DEVELOPER SHALL NOTIFY THE CITY ENGINEER OF SUCH MODIFICATIONS OR DEPARTURE AND TO SPECIFY THE MANNER IN WHICH REQUIRE SUCH MODIFICATIONS OR DEPARTURE AND TO SPECIFY THE MANNER IN WHICH THE SAME IS TO BE MADE AT NO COST TO THE CITY. APPROVED AS TO DESIGN ONLY BASED ON THE INFORMATION SUBMITTED HEREON. APPROVED FOR THE CITY OF TRACY.

KULDEEP SHARMA CITY ENGINEER DATE:

DETAILS

COUNTY SUBMITTAL 6/29/2015

SYMBOL	DATE	REVISIONS DESCRIPTION	APPROVED

DESIGNED BY E.Y.S.
DRAWN BY N.L.H.
CHECKED BY C.R.M.
SCALE AS SHOWN

IMPROVEMENT PLAN
BYRON ROAD
WATER LINE
TRACY CALIFORNIA

REGISTERED PROFESSIONAL ENGINEER EMOD Y. SARTEOUTNE No. C65112 CIVIL STATE OF CALIFORNIA

SHEET C1.2 OF 8 SHEETS

C:\Users\KWuser\appdata\local\temp\AcPublish_5052\A14504-ST IMP-BYRON WATERLINE.dwg 6-29-15 04:45:13 PM tsmith